Journal of English language Teaching and Learning

University of Tabriz

Volume 16, Issue 33, (Spring & Summer 2024)

Global Citizenship Education (GCE): A Study on the Philosophical Foundations and Educational Norms of the Iranian National and Educational Documents with respect to the Promotion of the GCE Goals in Formal English Language Education

Leily Afsar

Ph.D. Candidate in TEFL, Science and Research Branch, Islamic Azad University, Tehran, Iran
aban.autumn@gmail.com

Gholam-Reza Kiyani (Corresponding Author)

Department of Foreign Languages and Linguistics, Tarbiat Modares University, Iran
kiany_gh@modares.ac.ir

ARTICLE INFO:

1Received date:
2024.02.27
Accepted date:
2024.04.08

Print ISSN: 2251-7995
Online ISSN: 2676-6876

Keywords:

curriculum, globalization, global citizenship education, language planning, language policy

CC BY NC

Abstract

As a controversial subject, globalization has affected various aspects of our lives. Today, the intertwined world is run through complicated relationships and the education of competent human capitals has gained more significance than before. Recently, there has been a movement, known as Global Citizenship Education (GCE), toward a pervasive orientation to education in which issues such as Quality Education are the critical goals. The main aim of this study was to explore the extent to which The Iranian National Curriculum, The Doctrine of General Formal Education System and The Fundamental Reform Document of Education promote the GCE goals in formal English language education. Using a multi-concept model based on the GCE goals, the documents were the subject of scrutiny through document analysis. A survey questionnaire and a semi-structured interview were also utilized. Among 198 participants, 12 individuals accepted to be interviewed. The results of the document analysis and the questionnaire approved the documents' theoretical promotion of the GCE goals. However, they were criticized for being idealistic and incoherent in the interviews and literature review. Also, their appropriate implementation, practical efficiency and convincing educational achievement were disapproved. The study emphasizes global-oriented approaches in the country's formal education.

DOI: 10.22034/elt.2024.60741.2616
Citation: Afsar, L; Kiyani, G; (2024). Global Citizenship Education (GCE): A Study on the Philosophical Foundations and Educational Norms of the Iranian National and Educational Documents with respect to the Promotion of the GCE Goals in Formal English Language Education. *Journal of English Language Teaching and Learning*, 16(33), 23-45. DOI: 10.22034/elt.2024.60741.2616

Introduction

We live on a planet characterized by complex interdependence of economic, cultural, social, psychological, technological, environmental and political issue-areas, usually referred to as globalization, which has developed rapidly and profoundly since 1945. Today people relate to one another through international organizations, taking advantages of international trade, telecommunications, travel, and the Internet. While numerous people benefit from such enveloping webs of relations in various ways, many others are simultaneously negatively affected (Nester, 2010).

To acknowledge the theoretical and empirical complexities of the construct of globalization, according to Lewis (2022), it is significant to define its contours as a site of study. As Sklair (cited in Yang, 2000) asserts, globalization has at its center the idea that "many contemporary problems cannot be adequately studied at the level of nation-states, but need to be conceptualized in terms of global processes" (p. 1). In fact, according to Haji-Yousefi (2009), the intensity of challenges imposed by globalization has blurred the internal-external distinctions among various issues. This, in turn, has made governments more dependent on the cooperation of their nations.

Being emerged during the first decade of the 21st century, according to Tarozzi and Torres (2016), such issues as global learning and global citizenship are addressed in response to the challenges of diversity and multiculturalism. As Blevins (2011) points out, although the extent of globalization is debatable, the process has been spreading concurrently with a rapid increase in post-modernization of politics and culture. In the modern world, education is a contested site, so it is necessary for students to gain a more critical and broader understanding of the global relation and of their position.

Global education, as Handa (2018) notes, aims at the preparation of global citizens who are able to contribute to a more peaceful, just and sustainable world. Highlighting the complexity of globalization as well as the pluralistic and interdependent world, scholars such as Roberts (2007) consider the preparation of students at all levels for effective citizenship as a major concern of educators. Likewise, Lantz and Davies (2015) emphasize the need for global competence and concern for the challenges of local citizenship in a global arena.

For UNESCO (2015) Global citizenship "refers to a sense of belonging to a broader community and common humanity, it emphasises political, economic, social and cultural interdependency and interconnectedness between the local, the national and the global" (p. 14). The aim of Global Citizenship Education (GCE), according to UNESCO (2014), is to equip learners with knowledge, attitudes and skills that are based on and instill respect for human rights, social justice, diversity, gender equality and environmental sustainability and that empower learners to be responsible global citizens. In addition, GCE makes learners aware of their rights and responsibilities for a better world and future. In so doing, paying attention to teaching and learning English, as an international language, is emphasized.

Due to its novelty in formal English education in Iran, the issues of GCE and their unavoidable controversies in the country's education system, in general, and teaching and learning foreign languages, in particular, have motivated the researchers to conduct this study. The main aim of the present study was to explore the efficiency of the philosophical foundations and educational norms of The Iranian National Curriculum, The Doctrine of General Formal Education System and The Fundamental Reform Document of Education to face challenges imposed by globalization. From a theoretical point of view, the efficiency of the foreign language sections of the aforementioned documents to deal with global challenges and the extent to which the documents promote the principles of GCE were investigated. Regarding the practical aspect, the study examined the extent to which the principles of GCE could be applied in formal English language education in Iran.

Literature Review

Language Planning, Language Policy and Curriculum

According to Khor (2000), perhaps the most important and unique feature of the current globalization process is the "globalization" of national policies and policy-making mechanisms" (p. 4). In this respect, Kiany, Mirhoseini and Navidi Niya (2010) assert that policies play vital roles in the success of any social activities to achieve the defined goals or objectives. Since policies are made at the highest levels of organizations, they have incredible influences on different areas including education.

Like other fields, according to Ferguson (2006), there has been fundamental changes in the posture of language planning and language policy toward linguistic diversity and multilingualism. According to Salsabili (2013), there are various interpretations of national curricula in terms of defined goals for their codification, the political and educational nature and the way they are perceived in different education systems.

Salsabili (2013) criticizes The Iranian National Curriculum for advocating a centralized system of education and lack of flexibility. He also believes that The Iranian National Curriculum is rooted in a religious hegemony, an approach which determines the overall orientations of the document. In another study, Salsabili (2016) considers this hegemonic approach strongly idealist. He notes that such an approach does not foster research-based orientations toward teachers and schools appropriately and does not attempt to prevent prescriptive views of education. In fact, it does not consider any independent roles for schools in terms of planning and codifying The National Curriculum. In addition, it does not promote creative processes of teaching and learning. He asserts that it is necessary to codify The National Curriculum with due attention to the education system problems, considering the structures and contents of the different educational curricula. Such processes, as he asserts, must spring from a critical view in which any ideological or hegemonic approaches are avoided.

Salsabili (2013) also criticizes The Iranian National Curriculum for advocating a centralized system of education and lack of flexibility. Concerning this matter, Mehr Mohammadi (2010) points out that the codification of The National Curriculum has not been based on a written theoretical framework which nurtures various aspects in different areas, something which

necessitates a theoretical model for the design, codification, implementation and evaluation of an educational curriculum at the national level.

Regarding foreign language education, as Kiany et al. (2010) maintain, language education is a brief section in The National Curriculum Document and deals with mother tongue literacy education and foreign language education. They note that setting policies for foreign language education necessitates elaborate discussions due to the fact that the subject is widespread and complicated. On the other hand, they assert that even the availability of appropriate policies in some areas have not necessarily led to their proper implementation.

In another study, Kiany, Navidi Niya and Momeniyan (2011), investigate The National Curriculum's approach toward teaching and learning foreign languages in terms of theoretical and psychological foundations and the internal consistency of the content, accordance with the related literature and the six global norms of making policies and finally the consistency with other major formal documents. Based on the obtained results, the document has different weak points such as contrasts among the goals for teaching and learning foreign languages, inefficient cooperation of team of experts in its codification, lack of attention to the processes of needs analyses, lack of stakeholders' participation in the processes of codification and a very brief section on the topic of language education which is a vast field.

It is worth mentioning that other national and educational documents have faced the same problems. For instance, as Erabi (2018) points out, the majority of goals set by The Fundamental Reform Document of Education have not been met yet. In addition, Marzoghi, Aghili and Mehrvarz (2017) criticize the document for being incoherent.

Teaching English Language

According to Sharifian (2009), English has played several roles, ranging from marginalization and hegemony to empowerment and upward mobility, in the lives of individuals as well as communities around the world. It has also resulted in more complex relationships within and between communities of speakers worldwide.

As various authors observe, English, as a global language, has both positive and negative sides. Some authors such as Crystal (cited in Ha, 2008) believes that "as a lingua franca and today a global language, English has efficiently served as a bridge to connect all parts of the world, and thus made the world a village" (p. 72). In contrast, Sun (2013) notes that language conveys ideological, political and cultural connotations, which moves beyond its mere linguistic significance. From another point of view, Said (1993) believes that English is losing its distinctive cultural and expressive elements. In other words, English has been transformed largely into a technical language, being used to discuss problems and advance findings and interests.

In general, according to Sun (2013), in the age of knowledge economy, foreign language learning is an invisible investment for increasing human capital both nationally and individually. The new era, therefore, necessitates the mastery of English as a high skill for professional teachers and "cultural capital" or "linguistic capital" for learners (p. 41). Such mastery has a close link with the issues of employability which may result in changes in the

labor markets. However, it is significant not to ignore the impacts of teaching and learning English both ideologically and politically. In fact, it is possible to consider the spread of English teaching and learning as an opportunity to advocate one's own culture in spite of the negative aspects such as the language hegemony of English.

In Iran, modern education has an advantaged background in the country's contemporary history (Farhady, Sajadi & Hedayati, 2010). Like numerous people worldwide, the spread of English as a lingua franca has led to an increased interest in learning it among the Iranian. According to Pishghadam and Zabihi (2012), teaching English in Iran has posed complex questions for both teachers and learners. Unfortunately, the education system, in general, and English education, in particular, is suffering from a diversity of fundamental deficiencies. As a matter of fact, formal English language education is, unfortunately, inefficient because majority of learners, if not all, are unable to use the second language they have been taught at schools fluently, unless they have learnt it in private language institutes. Concerning such failures, as Sharifian (2009) points out, education authorities have eagerly considered language education as a tool for increasing an awareness of Europeanization and globalization. However, due to improper guidelines and limitations in the actual implementation of multiculturalist ideologies, it is difficult for teachers to transform the goals intended by official policy into viable educational methodology.

The Iranian National and Educational Documents' Approaches to Foreign Language Education

The National Curriculum stresses the importance of mastering a foreign language. The overall goal and necessity of learning foreign languages are to facilitate the appreciation of cultural interactions as well as human achievements in terms of communicating through various language forms such as oral, written, etc. for different purposes. All in all, it is stressed that foreign languages' curricula must enable students to make effective interactions at global level. Also, as its overall approach, it is maintained that learning foreign languages must not be limited to the theoretical and methodological frameworks, but promulgate national culture and values.

According to The Doctrine of General Formal Education System, learning the first foreign language is core-elective while the second one would be elective. Considering the pervasive and essential role of teaching and learning a foreign language (especially English as the international language), this section is unfortunately too brief to address and cover important language issues.

As The Fundamental Reform Document of Education briefly maintains, "the provision of foreign language education must be within the optional (Core-elective) section of the curriculum framework by observing the principle of stabilization and enforcement of the Islamic–Iranian identity" (p. 33).

Taking a closer look at the above-mentioned issues makes one ponder over the questions, which probably arise as what follows:

1. Do the philosophical foundations and educational norms of The Iranian National Curriculum, The Doctrine of General Formal Education System and The Fundamental Reform Document of Education promote GCE?
2. Are the foreign language sections of the Iranian National Curriculum, The Doctrine of General Formal Education System and The Fundamental Reform Document of Education efficient to meet the GCE goals?
3. Are there any statistically significant differences between English teachers and instructors' perceptions of the efficiency of the foreign language sections of The Iranian National Curriculum, The Doctrine of General Formal Education System and The Fundamental Reform Document of Education to face challenges imposed by globalization?

Method

In this study, the researchers used sequential exploratory design in which qualitative data collection and analysis are followed by quantitative ones. The priority is given to the qualitative aspect and the findings are integrated during the interpretation phase of the study.

Participants

In the present study, the perspectives of 198 Iranian English teachers and instructors, who were in charge of teaching and/or researching in universities or language institutes, were addressed. Since the utilized GCE questionnaire was an online one, the respondents were the members of various English channels and from different cities. The demographic data of the participants included the total number of the respondents (N=198), their age (19.2% were under 25, 21.2% were 25 to 30, 16.2% were 31 to 35, 19.2% were 36 to 40, 12.1% were 41 to 45 and 12.1% were over 45), the marital status (31.8% were single and 68.2% were married), the respondents' education (30.3% were BA students or held it, 30.8% were MA students or held and 38.9 % were Ph.D. students or held it) and their teaching experience (30.8% had less than 10 years, 21.2% had 10 to 15, 21.2% had 16 to 20, 11.6% had 21 to 25 and 15.2% had more than 25 years of teaching experience, respectively). It is noteworthy that among the participants (N=198), some of them (N=12) agreed to be interviewed.

Materials and Instruments

Instrument 1: Document Analysis

The main method utilized in the present study was document analysis in which the three documents were coded and analyzed. The sources for the intended codes and concepts in the document analysis were the reports by UNESCO (2000, 2001, 2014, 2015, 2016, 2017, 2018) in which Quality Education, Peace Seeking, Human Rights, Cooperation among Various Educational Stakeholders, Lifelong Learning, Utilization of New Technologies, Awareness about and Respect for Similarities and Differences, Environmental Sustainability and International Collaborations to Face Global Challenges are declared as the critical goals. These goals can be achieved by the promotion of essential competencies which enable us to work toward a more equitable world for all. These concepts constituted a multi-concept model based on which the documents were investigated.

Instrument 2: The GCE Questionnaire

In this study, a survey questionnaire titled, The Global Citizenship Education (GCE) Questionnaire, was developed by the researchers and implemented. The questionnaire was constructed based on an initial nine-concept model, but later changed into an eight-concept model of the GCE goals and its items were also developed based on the above-mentioned reports by UNESCO. It was a 5-point Likert scale and its items were piloted several times to check for its reliability and validity. In so doing, a number of items were removed. The final version, which included 42 items (5 demographic items and 37 GCE items), was utilized. In what follows, an example, i.e. item 7, is provided:

The philosophical foundations and educational norms of the foreign language sections in The Iranian National Curriculum, The Doctrine of General Formal Education System and The Fundamental Reform Document of Education:

7. acknowledge that the expansion of communication and information technologies necessitates more interactive and exploratory forms of learning.

strongly agree agree no idea disagree strongly disagree

Instrument 3: A Semi-Structured Interview

A semi-structured interview to strengthen the research findings was also conducted. In conducting the semi-structured interview, the purpose of the study was explained to each participant before the interview began and the research questions were also given to them beforehand. The interview topics were developed through the document analysis and the construction of the GCE Questionnaire. The following question, i.e. question 1, is an example:

To what extent and in what ways do the philosophical foundations and educational norms of The Iranian National Curriculum, The Doctrine of General Formal Education System, and The Fundamental Reform Document of Education, in general, and the foreign sections in the above mentioned documents, in particular:

1. promote a sense of belonging to a common humanity, sharing values and responsibilities, based on human rights?

Procedure

The primary method for data collection in the present study was document analysis. To this end, Atlas-ti, a software designed for coding qualitative data, was used to deal with the data obtained from the document analysis.

Based on the nature of the present study, convenience sampling was recognized more appropriate. To analyze the quantitative data obtained from the GCE Questionnaire, (SPSS) and (AMOS) were utilized. It was an online questionnaire and was sent to the participants who were the members of various English teaching groups and channels. Once the responses were collected from the participants, the data were coded and entered into the aforementioned software.

The interviews were conducted in Persian and each of them, except two interviews, took 25 minutes on average. The interviews were audio recorded with the knowledge and consent of all the participants and then the audio files were transcribed. Atlas-ti was also utilized for the data obtained from the interviews.

Data Analysis & Results

The Document Analysis Results

Considering table 1 (see Appendix A), one of the GCE goals, i.e. Quality Education, and its hierarchies of sub-sumption are exhibited as an example. In the table, the first selective code (Quality Education) is illustrated and it is classified into 7 axial codes. The first axial code, i.e. functional improvement of evaluation processes, encompasses 11 analytic codes. The second axial code, i.e. planning improvement, includes 9 analytic codes. The third axial code, i.e. compatibility with changes, has 7 analytic codes. The fourth axial code, i.e. improving teaching method, is made of 9 analytic codes. The fifth axial code, i.e. professional cooperation, includes 7 analytic codes. The sixth axial code, i.e. facilitating research based activities, encompasses 7 analytic codes. Finally, the seventh axial code, i.e. managing knowledge, has 6 analytical codes. Based on the table, the frequency of the above-mentioned concepts is the highest in The Iranian Doctrine of General Formal Education (34). The Fundamental Reform Document of Education (12) and The Iranian National Curriculum (10) come second and third, respectively.

Other concepts and their related tables were not presented due to the publication limitations.

The GCE Questionnaire Results

Descriptive Statistics

The descriptive statistics of the variables in the GCE Questionnaire are presented in Table 1:

Table 1. *Descriptive Statistics of the GCE Questionnaire*

The Latent Variable	N	Min	Max	Mean	SD	Skewness	Kurtosis
F1: Lifelong learning and utilization of new technologies	198	2.00	5.00	3.49	0.79	-0.04	-0.56
F2: Awareness about and respect for similarities and differences	198	2.50	5.00	3.78	0.55	-0.09	-.059
F3: Human rights	198	2.29	5.00	3.84	0.64	-0.30	-0.63
F4: International collaborations to fact global challenges	198	1.43	5.00	3.94	0.71	-0.98	1.78
F5: Peace-seeking	198	3.00	5.00	4.14	0.49	-0.04	-0.68
F6: Environmental sustainability	198	2.00	5.00	4.12	0.60	-0.61	0.10
F7: Cooperation among various educational stakeholders	198	1.67	5.00	3.29	0.77	0.59	-0.25
F8: Quality education	198	1.75	5.00	3.53	0.70	-0.01	-0.19

Based on Table1, the distribution of the variables was shown as approximately a normal one. Therefore, it was possible to use parametric statistics. Also, the application of AMOS to estimate Exploratory Factor Analysis (EFA) and Confirmatory Factor Analysis (CFA) was possible.

The Kaiser-Meyer-Olkin Test, Bartlett's Test & Chi-Square Test

Table 2 depicts the results of KMO Test, Bartlett's Test and Chi-Square Test as what follows:

Table 2. *The Results of KMO, Bartlett and Chi-Square Tests*

KMO Value		0.788
Chi-Square		3226.06
Bartlett's Test	DF	666
	Sig	0.001

According to Table 2, it was revealed that the sampling was fairly appropriate because the KMO value was more than 0.7. In addition, the Chi-Square test and the p-value from Bartlett's Test both confirmed the fact that the variances were unequal. Therefore, it was possible to run Exploratory Factor Analysis.

Exploratory Factor Analysis (EFA)

Based on the obtained results from EFA, the possibility of analyzing all the variables using EFA was confirmed. The findings also revealed that approximately 61% of the GCE questionnaire's total variance was explained by 8 factors. Also, it was shown that the percentage values of the variance before and after the rotation were significantly different. In fact, the 9 variables of this study were analyzed through Principal Component Analysis (PCA) and it was shown that categorizing them into 9 classifications was impossible due to the fact that the values related to the factor loading of one of the variables, i.e. Lifelong Learning, were not strong enough. Therefore, two variables of Lifelong Learning and Utilization of New Technologies were merged together.

Table 3. *Rotated Component Matrix*

	Component						
1	2	3	4	5	6	7	8
Q01		.690					
Q02		.783					
Q03		.562					
Q04		.650					
Q05		.714					
Q06					0.747		
Q07					0.58		
Q08			.329		0.583		
Q09							.686
Q10							.706

Q11					0.608			
Q12				.348		0.621		
Q13					0.8			
Q14								.826
Q15					0.777			
Q16				.774				
Q17				.764				
Q18								.816
Q19								.686
Q20		.370						.471
Q21					0.798			
Q22							.720	
Q23							.862	
Q24			.533					
Q25			.722					
Q26				.742				
Q27				.599				
Q28							.715	
Q29								.603
Q30						0.61		
Q31	.822							
Q32	.806							
Q33	.798							
Q34	.791							
Q35	.802							
Q36	.667							
Q37	.827							

Based on Table 3, which shows the results of EFA for the 8 remaining variables, it was possible to categorize the variables into 8 classifications because the values of factor loading for the 8 variables were all larger than 0.4 while the values of cross loading were all less than 0.4. It was also concluded that the classification of the questions based on the theoretical model in this study and the initial version of the GCE questionnaire were confirmed. In other words, all the questions were appropriately classified into their related latent variables. So, it was possible to use another technique called Confirmatory Factor Analysis.

Confirmatory Factor Analysis (CFA)

Having run CFA, the following figure is presented:

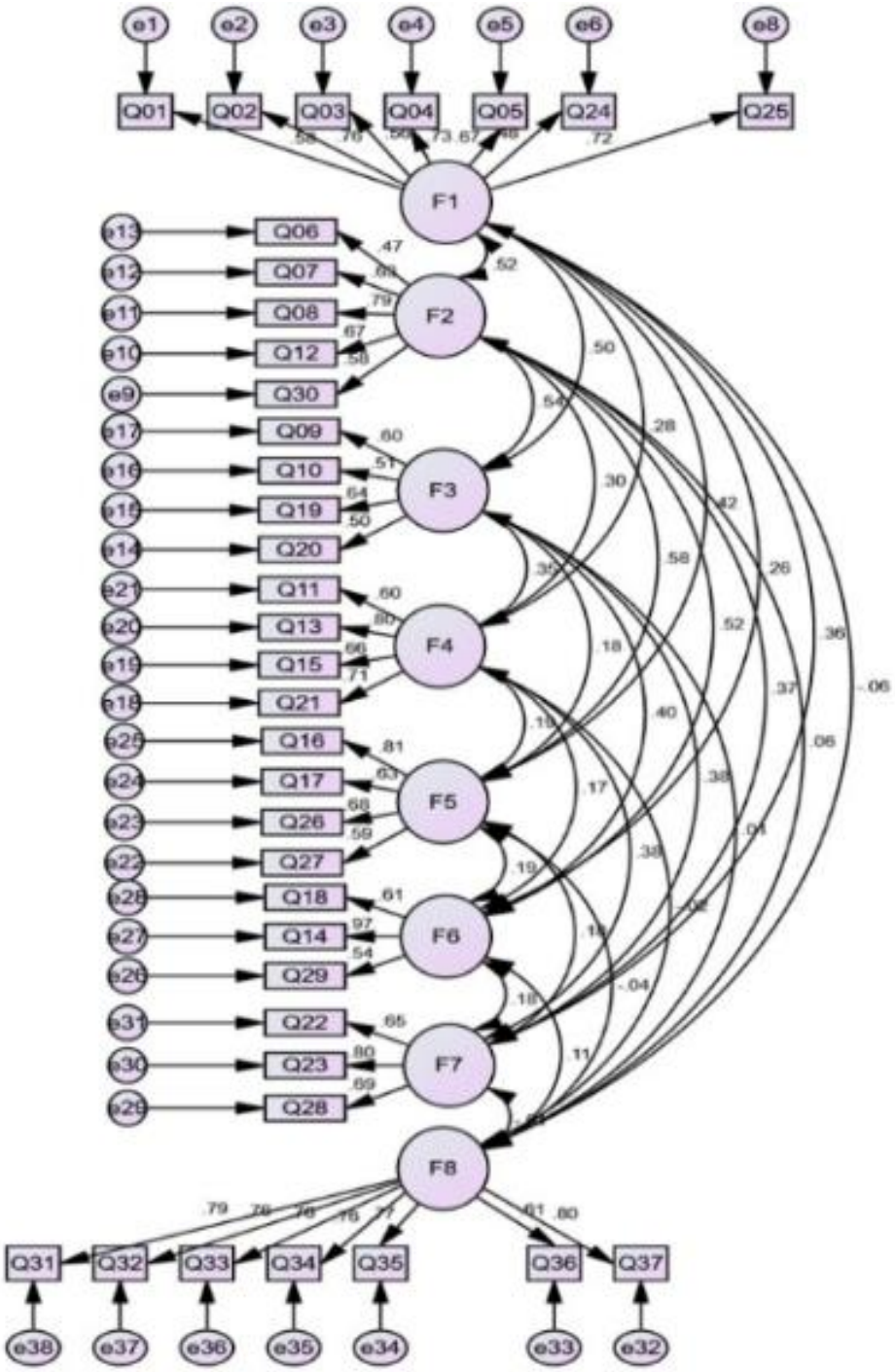

Figure 1. *The Initial Model for all Variables*

Figure 1 illustrates the relationship among all the variables. Based on Figure 1, the values for some of the factor loading led to weak results obtained from Average Variance Extracted (AVE) and, in turn, convergent and divergent validity.

To be acceptable, values of factor loading need to be larger than 0.5. Having removed the weak variables, the final model, which includes only appropriate variables, is exhibited in Figure 2 as what follows:

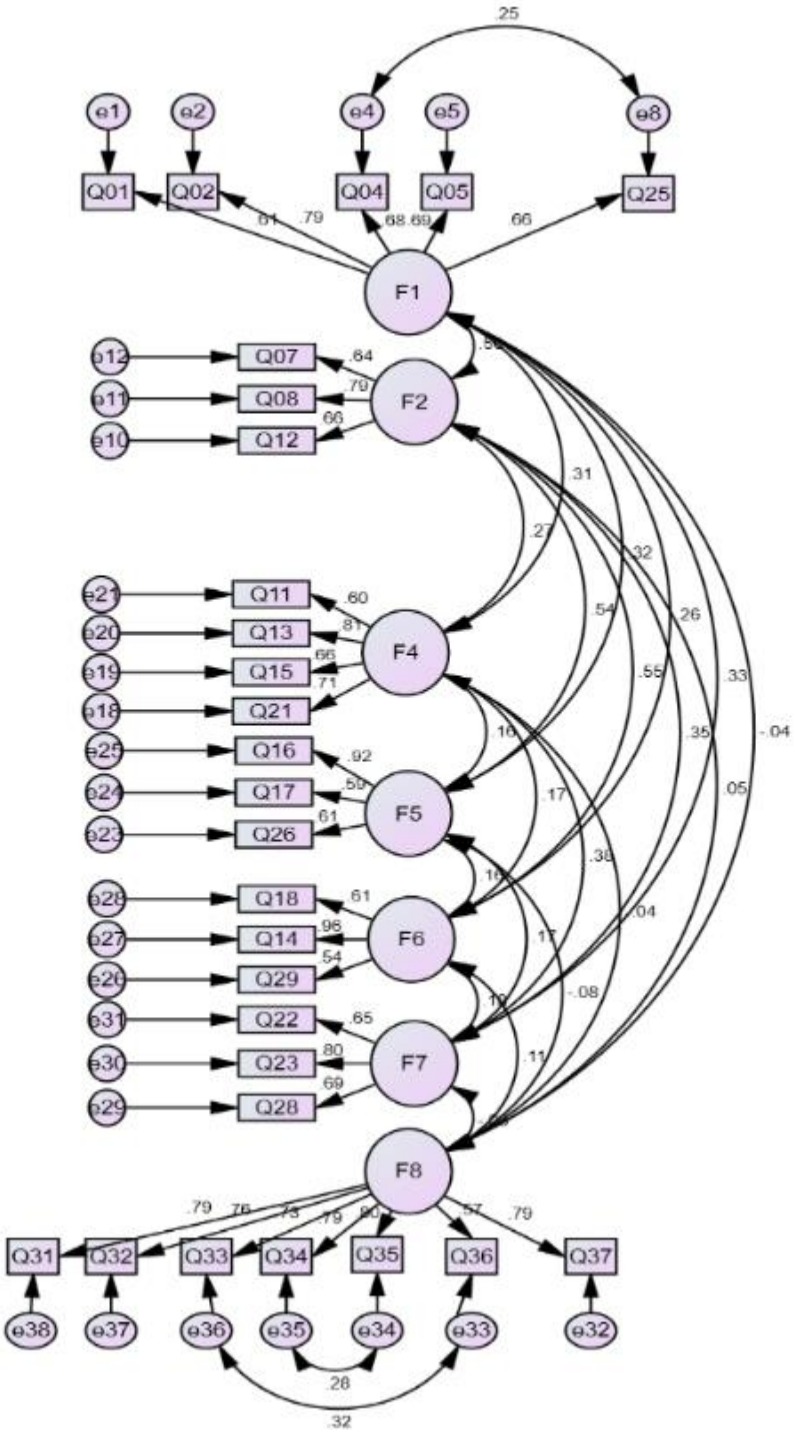

Figure 2. *The Final Model*

Figure 2 is the result of deleting all the inappropriate variables with weak factor loading. According to the obtained results, all the latent variables, except F3, had appropriate values for their observed variables. Therefore, F3 (Human rights) was deleted from the final CFA model due to its weak factor loading.

Model Fit Index

An index of fit is a catch-all term for a variety of methods to tell you how well observed data fits a particular probability distribution.

Table 4. *The Reliability of the GCE Questionnaire*

Criteria	Value	Critical Value
CMIN	1.699	
DF	326	
CMIN/DF	1.699	< 3
RMSEA	0.059	< 0.08
CFI	0.898	0.9 <
TLI	0.9	0.9 <
IFI	0.902	0.9 <

Regarding different indices of model fit in Table 4, it was concluded that all the indices met their respective criteria, indicating that the desired model was confirmed.

Cronbach's Alpha Reliability

Cronbach's alpha is a measure of internal consistency, i.e., how closely related a set of items are as a group.

Table 5. *Cronbach Alpha Reliability of the GCE Questionnaire*

The Latent Variable	the Item's Number	Cronbach Alpha
F1: Lifelong learning and utilization of new technologies	7	0.83
F2: Awareness about and respect for similarities and differences	5	0.76
F3: Human rights	4	0.689
F4: International collaborations to face global challenges	4	0.785
F5: Peace-seeking	4	0.769
F6: Environmental sustainability	3	0.733
F7: Cooperation among various educational stakeholders	3	0.753
F8: Quality education	7	0.9
Total Questionnaire	37	0.854

Based on Table 6, it was revealed that the alpha value for all the variables was larger than 0.6. Also, the alpha value for the total questionnaire was larger than 0.7. In other words, the reliability of the questionnaire was confirmed.

One-Sample t-Test

The Kolmogorov-Smirnov (K-S) test is a non-parametric test and is used to determine whether two distributions differ, or whether an underlying probability distribution differs from a hypothesized distribution. Table 7 depicts the results of the K-S test:

Table 6. *The Kolmogorov-Smirnov Test Results*

	F1	F2	F3	F4	F5	F6	F7	F8
K-S	1.215	1.406	1.636	1.456	1.538	1.615	1.418	1.500
Sig	.105	.030	.009	.029	.020	.011	.036	.022

Based on the K-S test presented in Table 6, the significance level of the K-S test was larger than 0.01. Therefore, the normality of the distribution for the variables was confirmed.

As the next step, the results of One-Sample T-test of the variables' mean are presented in Table 7:

Table 7. *The One-Sample T-test of the Variables' Mean*

	The Latent Variable	Number	Mean	SD	t	DF	Sig
F1	Lifelong Learning and Utilization of New Technologies	198	3.8564	.62767	19.199	197	.000
F2	Awareness about and Respect for Similarities and Differences	198	4.1465	.49501	32.589	197	.000
F3	Human Rights	198	3.7879	.54419	20.372	197	.000
F4	International Collaborations to Face Global Challenges	198	3.5379	.70248	10.774	197	.000
F5	Peace Seeking	198	4.1187	.59911	26.274	197	.000
F6	Environmental Sustainability	198	3.1936	.76448	3.563	197	.000
F7	Cooperation among Various Educational Stakeholders	198	3.4949	.78962	8.820	197	.000
F8	Quality Education	198	3.9416	.70911	18.684	197	.000

According to Table 7, the t-value for all of the variables was larger than 2.58 and the significance level for all of them was smaller than 0.01. Therefore, it was concluded that the mean value of the variables was significantly higher than the expected mean.

The Interview Results

With respect to the initial and secondary coding, Cohen's Kappa coefficient was calculated.

Table 8. *Cohen's Kappa Coefficient*

Total	Researcher 2			
	agree		disagree	
8	5	3	disagree	Researcher 1
100	97	3	agree	
108	102		6	Total
		Sig.	Value	Kappa
		.005[c]	0.39	

Table 8 shows the results of Cohen's Kappa coefficient. The estimated value for Kappa coefficient was (0.39) and the Sig value (0.005) was smaller than 0.01. These values confirmed the agreement among the raters. In fact, the disagreement included only 8 cases, i.e., 8 out of 108.

As it was previously mentioned, the data obtained from the interviews were analyzed through Atlas-ti. As an example, Diagram 1 (see Appendix B) exhibits the interviewees' opinions on Quality Education.

Discussion

In the era of globalization, as Pourahmadi (cited in Haji-Yousefi, 2009) maintains, various aspects of life at national levels should be considered in terms of their relationship with influential international economic, political and cultural factors. In other words, according to Myers (2006), nations are unable to solve various problems such as environmental degradation and migration, something that confirms the necessity of new forms of governance.

The new era, according to Ball, Dworkin and Vryonides (cited in Dogan, 2015), has altered the meaning of education and being educated by linking them to economic competence and lifelong learning. Such issues as studying abroad for students, having international experience and improving an understanding of the outside world as well as foreign language skills are seen as part of educational experience. As Torres (2002) notes, the contemporary discussion of education would not be meaningful unless it moves "beyond assumptions about national boundaries and goals internal to national agendas" (pp. 363-364) by addressing the questions raised by the globalization.

In what follows, the documents' consideration and promotion of the GCE goals and the summaries of the related discussions in the interviews are presented:

Quality Education

According to The National Curriculum, the present and future needs of the society and learners must be emphasized in the curriculum due to the evolving nature of the modern life. To this end, the continuous evaluation and assessment of the educational curricula are vital. As The Doctrine of General Formal Education System maintains, improving the supervision and assessment systems guarantees the quality and variety of educational services at various levels. The Fundamental Reform Document of Education puts emphasis on the improvement and reform in curriculum development, administrative and financial systems and infrastructures as well as improving the efficiency in the country's general formal education system.

In the interviews, however, it was argued that the education system is generally unqualified in terms of educating competent teachers and learners, promoting critical teaching and learning methods, utilizing creative learning resources, providing standard learning spaces, and evaluating the quality of educational processes.

Peace Seeking

The National Curriculum maintains that the educational curricula are meant to educate learners who are responsible citizens, seek peace and think globally. The Doctrine of General Formal Education System stresses issues such as "justice and peace seeking" (p. 338) and "the extension of humane and peaceful relationships with people of other countries" (p. 340). According to The Fundamental Reform Document of Education, "the evolution and excellence of humane dimension of students' identity to reinforce right-oriented, justice-seeking and peaceful relationships with other people all around the world is essential" (p. 17).

The interviewees noted that Peace Seeking should be considered as a long term goal and cannot be achieved by limiting it only to educational centers like schools. It was also

maintained that the educational centers generally promote competition among learners instead of cooperation and educational resources, especially books, do not foster Peace Seeking as a necessary competence for both teachers and learners.

Human Rights

According to The National Curriculum, "educational curricula must consider various cultural, geographical, gender and individual differences by being flexible" (p. 10). The Doctrine of General Formal Education System also emphasizes individual, social, ethnic, religious, and gender characteristics considerations of the specific goals of the system at local and national levels. The Fundamental Reform Document of Education also emphasizes

> *the consideration of individual, gender, cultural and geographical differences in designing the educational curricula (p. 32).*

In the interviews, Human Rights was maintained as a macro plan encompassing various aspects. Also, theoretical and practical aspects of Human Rights in educational resources and documents were asserted as idealistic. In other words, the practical aspect was considered weak and inefficient.

Cooperation among Various Stakeholders

The National Curriculum maintains that the desirable implementation of the curriculum necessitates the active cooperation of competent and professional educators. The document also emphasizes the role of students. According to The Doctrine of General Formal Education System,

> *the education system of Iran, though being founded and supported by the government, enjoys the cooperation of families, media and NGOs (p. 337).*

As another major goal of GCE, building up active cooperation between the country's general formal education system and all the stakeholders is asserted by The Fundamental Reform Document of Education.

As a matter of fact, the interviewees believed that the cooperation of families is more financial. In fact, families' ideas or suggestions are hardly utilized in making educational decisions. The same is true about students' roles. Regarding the role of media, it was asserted that media advocate a competitive atmosphere in educational centers and among educational stakeholders rather than a cooperative one due to the fact it is financially more beneficial for them. Also, it was noted that cooperation should be constructive and promoted at all levels of education, i.e. from making policies to teaching and learning.

Lifelong Learning

The National Curriculum underlines safe, flexible, dynamic and rich conditions in which students' needs and interests would be met. The Doctrine of General Formal Education System also emphasizes that the educational curricula must be flexible enough to provide the required opportunities for learners to develop their skills and competencies. The Fundamental Reform Document of Education also maintains that the education of students must enable them to gain

competence to face the social and political changes accountably and wisely through understanding the social and political concepts and participate constructively at national and global levels.

The interviewees noted that the education system is responsible to teach vital competencies to learners at basic levels and prepare them for future. Therefore, it is significant for the system to provide creative and challenging educational resources and methods of teaching and learning. However, it was asserted that the educational system does not promote Lifelong learning. Instead, it mainly focuses on the quantitative aspects. Regarding formal teaching and learning English, in particular, it was maintained that the system is inefficient and learners are unable to use the language appropriately and teachers' knowledge of English is generally insufficient.

Utilization of New Technologies

According to The National Curriculum, the implementation of new technologies such as virtual spaces and social networks as well as observing the ethics of their utilization. The Doctrine of General Formal Education System strongly stresses the appropriate utilization of new technologies by the educational centers to improve the quality of their educational programs and services which, in turn, leads to the development of the country. The Fundamental Reform Document of Education maintains that

> *the production and application of appropriate electronic content, the amendment and updating of teaching methodologies with an emphasis on interactive, group and creative methods and the promotion of the capacities of distance and virtual learning in educational plans and programs (p. 53)* must be emphasized.

In the interviews, it was maintained that although students are talented and interested in using new technologies, educational centers, especially formal ones, are not equipped with enough computers or other related devices. Also, it was noted that new technologies and their usage are not financially supported by the government. Consequently, the country's development in this area lags behind. Finally, it was proposed that new technologies are very useful tools for teaching and learning foreign languages, but formal educational centers do not use them sufficiently.

Awareness about and Respect for Similarities and Differences

According to The National Curriculum, fostering "cultural and inter-cultural literacy" (p. 27) would result in better understanding of other cultures and the improvement of communication among various nations. The Doctrine of General Formal Education System puts emphasis on aspects such as

> *the preservation of cultural heritage and respect for other cultures and the promotion of a sense of belonging to common humanity (p. 340).*

The Fundamental Reform Document of Education also highlights

> *the appreciation of artistic works by understanding the cultural and cross-*

> *cultural concepts and making efforts to preserve and promote the cultural, artistic and civilization heritage of the country at national and global levels* (p. 31).

The interviewees, however, asserted that the education system has not been successful in educating cultural issues in terms of providing opportunities in different parts of the country. In this respect, it was maintained that creative lesson planning can foster cultural understanding. To this end, teaching and learning foreign languages was introduced as very important.

Environmental Sustainability

The National Curriculum underlines "the importance of protecting the environment and natural resources" (p. 18) and "respecting other creatures" (p. 19). The obligation to environmental responsibilities and due attention to the standards defined for the environmental sustainability are also emphasized by The Doctrine of General Formal Education System. According to The Fundamental Reform Document of Education,

> *the preservation of the environment and attempt to improve the quality of living in terms of protecting the environment are maintained as the duty of those who are educated by the education system (p. 31).*

In the interviews, it was generally believed that environmental issues are not priorities, so the environmental laws and rules are not implemented seriously. Considering it as an individual and social responsibility, the interviewees maintained that the protection of the environment must be the concern for everyone in the society and should not be limited to the educational centers.

International Collaborations to Face Global Challenges

The National Curriculum emphasizes the respect for global treaties, active participation in international arenas, extending mutual dialogues and peaceful approaches in solving international problems and efforts to eradicate issues such as oppression, poverty, diseases and discrimination at global levels. Highlighting the interconnectedness of the world and the importance of international co-operations, The Doctrine of General Formal Education System maintains the utilization of successful global experiences. The Fundamental Reform Document of Education stresses the necessity of active participation in international interactions and sharing the successful local experiences at international scientific and academic communities.

According to the interviewees, the modern world and its complicated challenges necessitate collaborations of various countries due to the fact that most problems are global and cannot be dealt with without such collaborations. Also, it was asserted that the education system must educate learners who can think globally and are able to act appropriately to protect their own country and be useful for others. However, it was noted that educational resources do not provide enough, if any, information about the merits of global collaborations for developing one's country. For instance, learning foreign languages is one of the key elements of thinking

and acting globally, but the interviewees emphasized that the system has not been successful to reach this goal.

Conclusion

Based on the results obtained from the document analysis and the approaches to teaching and learning which are maintained in the documents' sections and subsections, it can be claimed that the documents have asserted various issues which are in line with the GCE goals. Also, the findings from the GCE Questionnaire revealed that the mean value of the variables was significantly higher than the expected mean. In other words, the participants' responses approved the documents' theoretical promotion of the GCE goals in formal English language Education.

However, the interviews and literature review generally disapproved the documents' appropriate implementation, practical efficiency and educational achievement. It was argued that the documents' goals and objectives are idealistic or incoherent in some areas. Consequently, the education system has not been efficient in different fields, especially formal language teaching and learning, because the documents' unrealistic approaches to education has resulted in an ineffectual state in which their declared goals and objectives have remained in theory. In addition, the efficiency of the related documents in terms of making policies, designing educational resources, implementing their policies, evaluating their functions and achieving their goals in various areas, in general, and language teaching and learning, in particular, was disapproved.

Considering the discussions of globalization and its consequences, the researchers believe that it is necessary to take into account the significant role of GCE in the country's formal education system in terms of making policies and codifying national and educational documents toward a more global-oriented approach. It is also noteworthy that majority of the studies which were discussed in the literature review focused on The National Curriculum. Therefore, it is definitely important to conduct more studies on the two other documents, i.e., The Doctrine of General Formal Education System and The Fundamental Reform Document of Education, in the future in order to investigate them more critically and from various aspects and shed light on their possible drawbacks.

It is noteworthy that a mixed-methods research should preferably be done by a team of researchers because of the variety of the required data collection techniques, something that, regrettably, was not at the researchers' disposal. Hence, only the feasible techniques such as document analysis, questionnaire and interview were employed. Also, it is worth mentioning that only the perspectives of Iranian English teachers and instructors who were in charge of teaching and/or researching in universities or language institutes were addressed.

Acknowledgement

The authors would like to express their deepest appreciation to all those who contributed to the completion of this research. In addition, we are sincerely grateful for the insightful comments suggested by anonymous reviewers. Also, our thanks go to all the people who have supported us to complete the research work directly or indirectly.

References

Blevins, D. M. (2011). *New directions in citizenship education: Globalization, state standards and an ethical/critical social studies curriculum* [Doctoral dissertation, The University of Ohio]. The University of Ohio. http://etd.ohiolink.edu

Dogan, D. (2015). *The ERASMUS programme in internationalization of Turkish higher education* [Master thesis, The University of Ohio]. The University of Ohio. http://etd.ohiolink.edu

Ferguson, G. (2006). *Language planning and education*. Edinburg University Press.

Ha, Ph. L. (2008). *Teaching English as an international language: Identity, resistance and negotiation.* Multilingual Matters.

Handa, N. (2018). *Education for sustainability through internationalization: Transnational knowledge, exchange and global citizenship*. Palgrave MacMillan.

Khor, M. (2000). *Globalization and the south: Some critical issues*. Jutaprint.

Kiany, Gh. R., Mirhosseini, S. A., & Navidinia, H. (2010). Foreign language education policies in Iran: Pivotal macro considerations. *Journal of English Language Teaching and Learning,* 53(222), 49-70.

Lantz, C., & Davies, I. (2015). Global education in theory. In B. M. Maguth & J. Hilburn (Eds.), *The state of global education: Learning with the world and its people*. (pp. 41-59). Routledge.

Lewis, S. (2022). *Globalization and education*. https://www.researchgate.net/publication/365601992

Marzoghi, R., Aghili, R., & Mehrvarz, M. (2017). A Methodological and Theoretical Analysis and Critique of the Educational Fundamental Transformative Documents of Islamic Republic of Iran. *Journal of Foundations of Education,* 6(2), 21-40. http://dx.doi.org/10.22067/fedu.v6i2.53863

Myers. J. P. (2006). Rethinking the social studies curriculum in the context of globalization: Education for global citizenship in the U.S. *Theory & Research in Social Education,* 34(3), 370-394, http://dx.doi.org/10.1080/00933104.2006.10473313

Nester, W. R. (2010). *Globalization: A short history of the modern world*. Palgrave Macmillan.

Pishghadam, R., & Zabihi, R. (2012). Crossing the threshold of Iranian TEFL. *Applied Research in English,* 1(1), 57-71.

Roberts, M. (2007). Global dimensions of schooling: Implications for internationalizing teacher education. *Teacher Education Quarterly,* 34(1), 9-26.

Said, E. W. (1993). *Culture and imperialism.* Vintage Books.

Sharifian, F. (2009). *English as an international language: Perspectives and pedagogical issues*. Multilingual Matters.

Sun, J. (2013). Globalization and language teaching and learning in China. *International Journal on Integrating Technology in Education (IJITE),* 2(4), 35-42. http://dx.doi.org/10.5121/ijite.2013.2404

Tarozzi, M., & Torres, C. A. (2016). *Global citizenship education and the crises of multiculturalism: comparative perspectives*. Bloomsbury Academic.

Torres, C. A. (2002). Globalization, education, and citizenship: Solidarity versus markets? *American Educational Research Journal*, *39*(2), 363-378. http://dx.doi.org/10.3102/00028312039002363

UNESCO. (2000). *2000 Final report*. www.unesco.org

UNESCO. (2001). *2001 International conference on education: 46th session*. www.unesco.org

UNESCO. (2014). *2014 Global citizenship education: Preparing learners for the challenges of the 21st century*. http://www.unesco.org/new/en/globalcitizenship-education

UNESCO. (2015). *2015 Building peaceful and sustainable societies: Preparing for post-2015.* http://en.unesco.org/themes/education-sustainable-development

UNESCO. (2015). *2015 Challenges and opportunities in measuring education for sustainable development and global citizenship education.* http://en.unesco.org/themes/education-sustainable-development

UNESCO. (2015). *2015 Global citizenship education: Citizenship education for globalizing societies*. http://creativecommons.org/licenses

UNESCO. (2015). *2015 Global citizenship education: Topics and learning and objectives*. http://unesdoc.unesco.org/images/0023/002329/232993e.pdf

UNESCO. (2015). *2015 World education forum 2015: Final report*. http://www.unesco.org/open-access/terms-useccbysa-en

UNESCO. (2016). *2016 Schools in action: Global citizens for sustainable development.* https://creativecommons.org/licenses/by-sa/3.0/igo/

UNESCO. (2017). *2017 Measuring global citizenship education: A collection of practices and tools.* https://www.brookings.edu/about-us/annual-report/.

UNESCO. (2018). *2018 Preparing teachers for global citizenship education: A template.* http://www.unesco.org/open-access/terms-useccbysa-en

Yang, R. (2000). Tensions between the global and the local: A comparative illustration of the reorganisation of China's higher education in the 1950s and 1990s. *Higher Education*, 39(3), 319-337. http://dx.doi.org/10.1023/A:1003950902434

اعرابی، فرشیده. (۱۳۹۷). بررسی اهداف اسناد بالادستی (سند تحول بنیادین آموزش و پرورش، نقشه جامع علمی کشور) و مقایسه آن با اهداف اساسنامه انجمن اولیا و مربیان در دوره ابتدایی. سوّمین کنفرانس بین المللی، علوم تربیّتی و رفتاری.

حاجی یوسفی، امیرمحمد، افتخاری، اصغر، پوراحمدی، حسین، تاجیک، محمدرضا و .... (۱۳۸۸). دولت و جهانی شدن در خاورمیانه. مرکز چاپ و انتشارات دانشگاه شهید بهشتی.

سلسبیلی، نادر. (۱۳۹۲). برداشت‌های مختلف در تدوین برنامه درسی ملی: تأملی در سند برنامه درسی ملی جمهوری اسلامی ایران. فصلنامه تعلیم و تربیت، شماره ۱۱۸، مهر ۹۲، ۹۱-۶۳.

سلسبیلی، نادر. (۱۳۹۵). بررسی و مقایسه سند برنامه درسی ملی تدوین شده جمهوری اسلامی ایران با زیرنظام برنامه درسی در مبانی نظری تحول بنیادین نظام تعلیم و تربیت رسمی و عمومی. فصلنامه پژوهش های کیفی در برنامه درسی، شماره ۵، زمستان ۹۵، ۱۴۱-۱۰۷.

فرهادی، حسین، سجّادی، ف. و هدایتی، ح. (۱۳۸۹). تأملاتی در آموزش زبان خارجی در ایران. TESL-EJ مارس، دوره ۱۳، شماره ۴.

کیانی، غلامرضا؛ نویدی نیا، حسین و مومنیان، محمد. (۱۳۹۰). نقد و بررسی طرح ملی نگاهی دوباره به رویکرد برنامه درسی ملی نسبت به آموزش زبانهای خارجی. فصلنامه پژوه های زبان و ادبیات تطبیقی، شماره پیاپی۶، تابستان ۱۳۹۰، ۲۰۹-۱۸۵.

مهرمحمدی، محمود. (۱۳۸۹). نقد و نظری بر نگاشت سوم سند برنامه درسی ملی جمهوری اسلامی ایران. فصلنامه مطالعات برنامه درسی ایران، سال پنجم، شماره ۱۸، پاییز ۱۳۸۹، ۳۱-۸

Appendices

- ## Appendix A

Table: *The Document Analysis of Quality Education*

مقوله (سطح ۱)	زیر مقوله اصلی (سطح ۲)	مفهوم (سطح ۳)	فراوانی در سند برنامه درسی	فراوانی در سند رهنامه	فراوانی در سند تحوّل بنیادین
ارتقای کیفیّت آموزش	بهبود روشهای ارزشیابی عملکرد	نظارت بر حسن اجراي استانداردهاي وضع شده	۱	۰	۰
		ارزشيابي عملكرد بر مبناي كارايي و اثربخشي نتايج كار	۰	۱	۰
		ارزيابي مستمر عملكرد مدرسه	۰	۱	۰
		تسهيل ارتقاي سطح عملكرد مدارس	۱	۰	۰
		لزوم انجام ارزشيابي عملكرد بصورت دوره اي و مستمر	۰	۱	۰
		تسهيل مشاركت تمام ذي نفعان در ارزشيابي برنامه درسي	۱	۰	۰
		استمرار در ارزشيابي برنامه درسي ملي	۱	۰	۰
		ارتقاي مستمر عملكرد نظام تربيت رسمي و عمومي	۰	۱	۰
		ايجاد نظام رتبه بندي مدارس	۰	۰	۱
		تعيين ملاك هاي ارزشيابي معلمين جهت ارتقاي رتبه	۰	۰	۱
		شاخص هاي كيفي جهت ارزيابي عملكرد مدارس	۰	۰	۱
	بهبود برنامه ريزي	توجه به ابعاد هويتي در طرحريزي برنامه درسي	۰	۱	۰
		برنامه با رويكرد آينده پژوهانه	۱	۰	۰
		برنامه با رويكرد نوآورانه	۱	۰	۰
		دست يابي به جايگاه برتر علمي و فناوري در سطح منطقه	۰	۱	۰
		تسهيل مشاركت مربيان در برنامه ريزي درسي	۰	۱	۰
		تقويت انعاف پذيري در تعريف اهداف، برنامه ها و سياستهاي پژوهشي	۰	۱	۰
		برنامه ريزي كوتاه مدت رشد منابع انساني	۰	۱	۰
		برنامه ريزي بلند مدت رشد منابع انساني	۰	۱	۰
		پيشگيري از بحران ها در نظام تربيت رسمي	۰	۱	۰
	همسويي با تغييرات	آينده پژوهي	۰	۰	۱
		تحول آفريني	۰	۱	۰
		ايجاد همسويي با نيازهاي حال و آينده جامعه	۰	۱	۰
		ايجاد همسويي بين عوامل موثر بر تربيت مربيان	۰	۱	۰
		ايجاد يكپارچگي بين نقش هاي وجودي و اجتماعي محصل	۰	۱	۰
		نگرش نظام مند در مديريت تغييرات و نوآوريها	۰	۱	۰
		پايش مستمر تحولات موثر بر نظام تعليم رسمي	۰	۰	۱
	بهبود شيوه هاي تدريس	توجه به بعد برون مدرسه اي آموزش	۰	۱	۰
		بهبود روشهاي آموزش دانش آموزان	۰	۰	۰
		توجه به آزادي عمل دانش آموز	۰	۱	۰
		توجه به آموزش زبان خارجي اول و دوم	۰	۱	۰
		تقويت خودپنداره مثبت دانش آموز	۱	۰	۰
		تاكيد بر كار گروهي	۱	۰	۰
		به حداقل رساندن رقابت جويي	۱	۰	۰
		حفظ شان و كرامت انساني دانش آموز	۱	۰	۰
		بهره مندي هوشمندانه از فناوري هاي نوين	۰	۰	۱
	تعامل حرفه ای	اعتماد عمومی	۰	۱	۰
		تسهیل ارتباط بین مدرسه با محیط بیرونی	۰	۱	۰
		تسهیل همسویی بین مدرسه، خانواده و رسانه	۰	۰	۱
		همسویی رابطه میان مدرسه و خانواده	۰	۱	۰
		تعریف و استقرار شورای علمی در هر مدرسه	۰	۱	۰
		بستر سازی فضای تعاملی بین مربی و متربی	۰	۱	۰
		ارتباط موثر با متخصصان و صاحبنظران	۰	۰	۱
	تسهیل فعالیّت های پژوهشی	حمایت از تفکر انتقادی در حوزه پژوهش	۰	۱	۰
		حمایت از پژوهشگران حوزه آموزش و پرورش	۰	۰	۱
		لزوم تعریف و انجام پژوهش های کاربردی و بنیادی	۰	۱	۰
		لزوم انجام پژوهش های کوتاه مدت و بلند مدت	۰	۱	۰
		توسعه فرهنگ پژوهش در تمام ابعاد نظام آموزش رسمی	۰	۱	۱
		حضور فعال در محافل علمی و پژوهشی	۰	۱	۰
		انجام پژوهش هایی در جهت بررسی عملکرد نظام تربیت رسمی	۰	۱	۰
	مدیریت دانش	ایجاد فرصت جهت اشتراک تجربیات	۰	۱	۰
		دستیابی به تجربیات علمی جدید	۰	۱	۰
		استفاده از تجربیات نخبگان	۰	۰	۱
		ترویج عادلانه دانش	۰	۱	۰
		بهره گیری از تجربیات موفق حوزه آموزش در سطح بین المللی	۰	۰	۱
		مستندسازی تجربه های تربیتی	۰	۱	۰
جمع			۱۰	۳٤	۱۲

- **Appendix B**
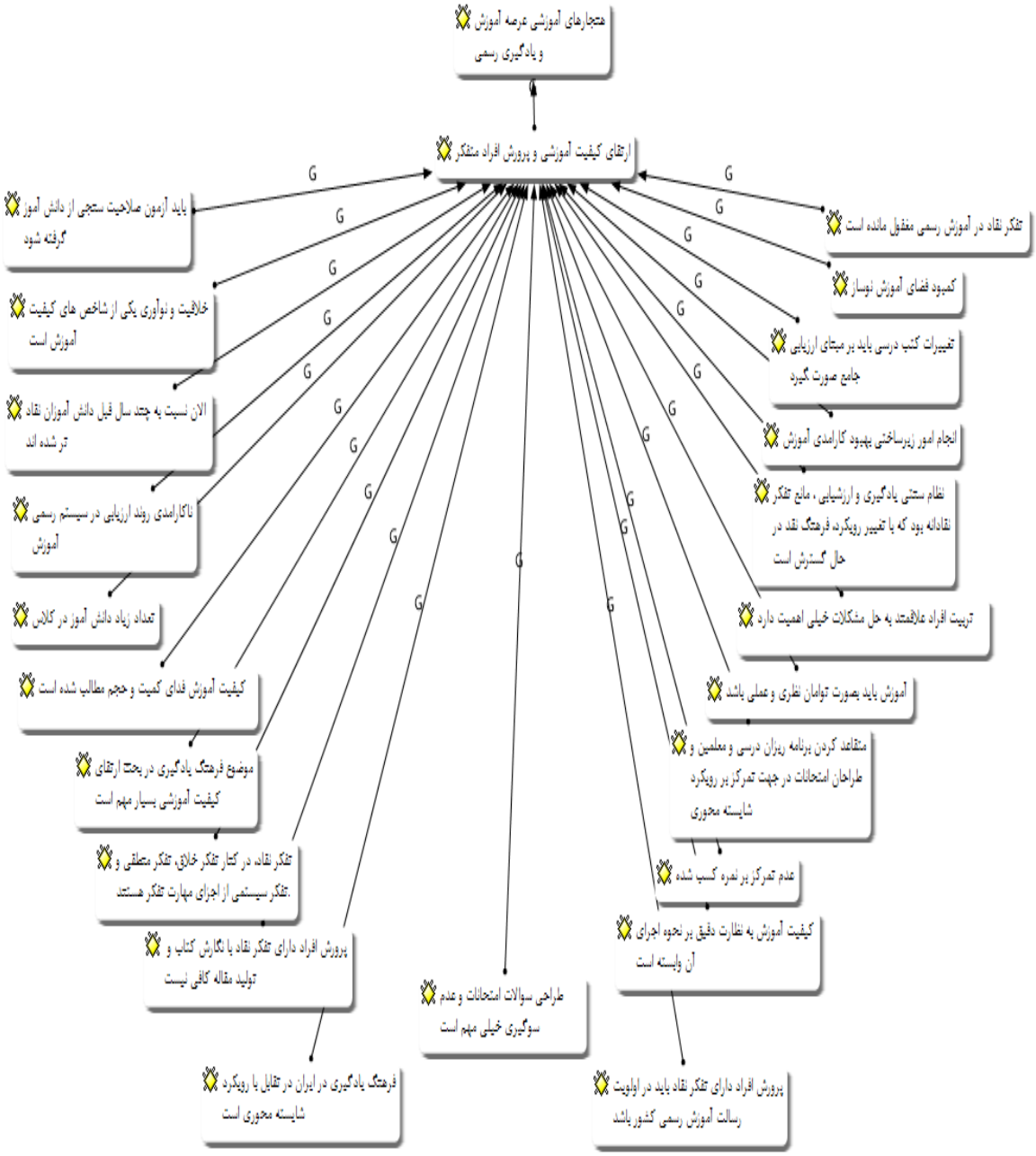
Diagram 1:*The Interviewees' Consideration of Quality Education*